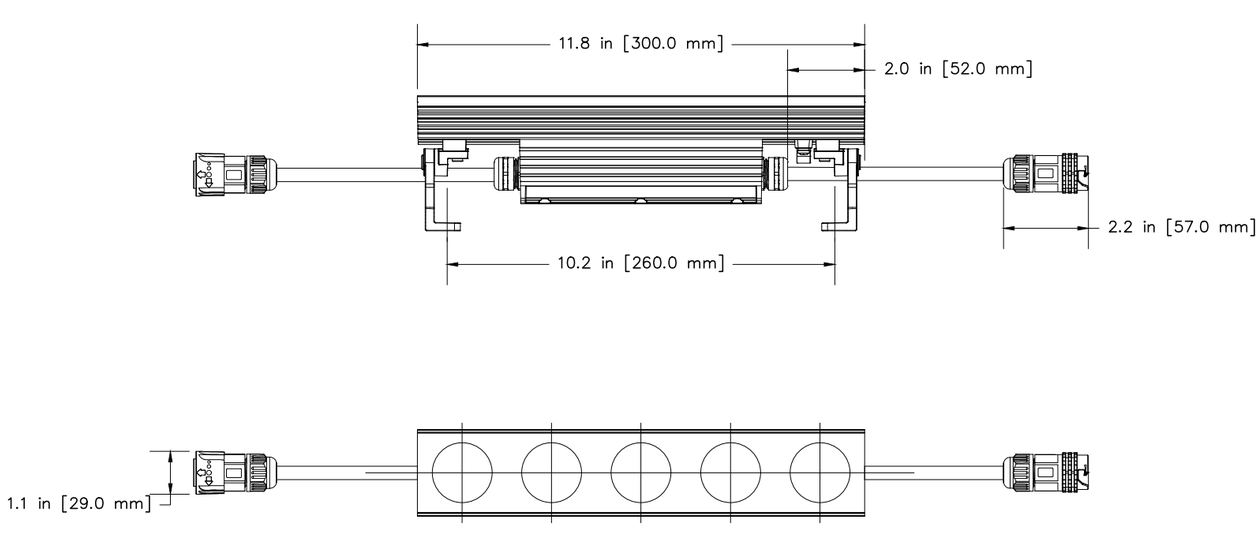

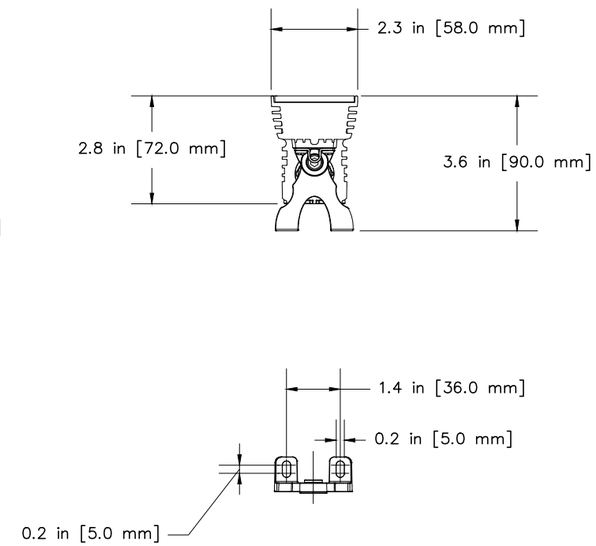

1 TX202 ProPoint Linear – 1ft Luminaire
SCALE: N.T.S.

traxoncue
AN OSRAM BUSINESS
200 Ballardvale Street
Wilmington, MA 01887
+1 (978) 570-3000 [T]
www.traxontechnologies.com

Traxoncue is a solutions company. We are happy to provide whatever information and documentation is needed to clarify the system design and deepen understanding of our products. Please know, however, that our expertise is limited to our products only. Traxoncue and its employees cannot be held responsible for decisions relating to future layout, lighting design, or other aspects of the overall system. Traxoncue is not responsible for the design of the electrical system, including the electrical circuits and the electrical components used to power our fixtures. Our fixtures are designed to be powered by Class 2 power supplies, but they are merely suggestions. They must be reviewed by qualified professionals and incorporated into the construction documents of each relevant discipline.
Our products are designed, manufactured, and tested to function properly when installed and used according to the instructions provided with our products and the specifications listed on our quotations. As part of this service, a representative of Traxoncue will ensure that our system is connected and configured correctly, and that all Traxoncue components are functioning together properly. Occasionally, a customer may request Traxoncue to install our fixtures and control equipment in the intended location and to make all wire terminations. The installing contractor is also responsible for making any necessary adjustments to mounting and/or wiring as determined by the Electrical Traxoncue. Traxoncue does not provide pre-rigging or pre-mounting of fixtures as part of its installation service. The installing contractor is responsible for providing the necessary equipment and personnel to safely install our fixtures.
Traxoncue is not responsible for content (e.g. videos or lighting cues) unless it is specifically agreed upon and listed separately from standard system commissioning services in the project quotation.
Traxoncue is happy to support your team in every way we can, and we look forward to a beautiful and successful installation.

© 2010 Traxon Technologies

REV.	DATE	BY	REMARKS

190903 ProPoint Linear Standard Drawing - ERC.dwg

#####

PROJECT: #####	LOCATION: #####		
DATE: #####	JOB NO: #####	FILE NAME: 190903 ProPoint Linear Standard Drawing - ERC.dwg	
SHEET SIZE: #####	SCALE: #####	DRAWN BY: #####	CHECKED BY: #####
SHEET NUMBER: TX202	SHEET TITLE: ProPoint Linear - 1ft Luminaire		