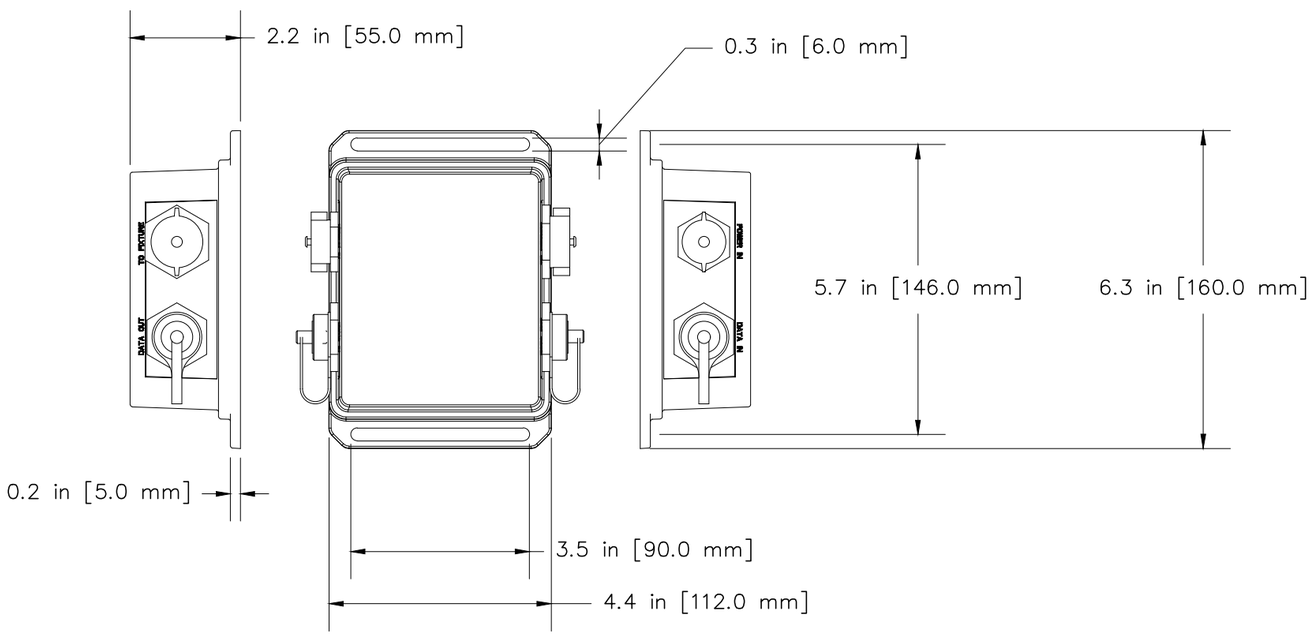

1
TX203

ProPoint Linear – Data Injector

SCALE: N.T.S.

200 Ballardvale Street
Wilmington, MA 01887
+1 (978) 570-3000 [T]
www.traxontechnologies.com

traxon tcue
AN OSRAM BUSINESS

Traxontcue is a solutions company. We are happy to provide whatever information and documentation is needed to clarify the system design and deepen understanding of our products. Please know, however, that our expertise is limited to our products only. Traxontcue and its employees cannot be held responsible for decisions relating to future layout, lighting design, or other aspects of the installation. The installation contractor is responsible for the layout, lighting design, and for ensuring that all components are functioning together properly. They are merely suggestions. They must be reviewed by qualified professionals and incorporated into the construction documents of each relevant discipline.
Traxontcue is not responsible for content (e.g. videos or lighting cues) unless it is specifically agreed upon and listed separately from standard system commissioning services in the project quotation.
Traxontcue is happy to support your team in every way we can, and we look forward to a beautiful and successful installation.
© 2010 Traxon Technologies

REV.	DATE	BY	REMARKS

PROJECT: ####	LOCATION: ####		
DATE: ####	JOB NO: ####	FILE NAME: 190903 ProPoint Linear Standard Drawing - ERC.dwg	
SHEET SIZE: ####	SCALE: ####	DRAWN BY: ####	CHECKED BY: ####
SHEET NUMBER: TX203	SHEET TITLE: ProPoint Linear - Data Injector		

####