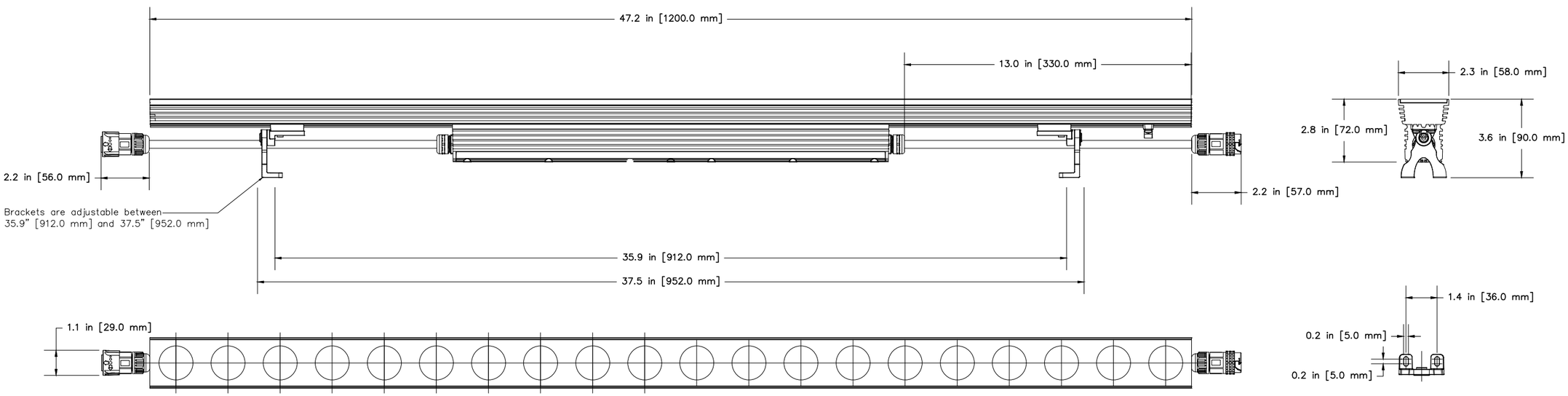

1 TX201 ProPoint Linear – 4ft Luminaire
SCALE: N.T.S.

traxoncue
AN OSRAM BUSINESS
200 Ballardvale Street
Wilmington, MA 01887
+1 (978) 570-3000 [T]
www.traxontechnologies.com

Traxoncue is a solutions company. We are happy to provide whatever information and documentation is needed to clarify the system design and deepen understanding of our products. Please know, however, that our expertise is limited to our products only. Traxoncue and its employees cannot be held responsible for decisions relating to future layout, lighting design, structural integrity, electrical wiring, or any other aspect of a project that is not directly related to our products. Our product specifications are based on our quotations. As part of this service, a representative of Traxoncue will ensure that our system is connected and configured correctly, and that all Traxoncue components are functioning together properly. Occasionally, the installing contractor may request Traxoncue to pre-install some of our components in the factory to save time during the installation process. In such cases, it is the sole responsibility of the installing contractor to install all fixtures and control equipment in its intended location and to make all wire terminations. The installing contractor is also responsible for making any necessary adjustments to mounting and/or wiring as determined by the Director of Traxoncue. Traxoncue does not provide pre-rigging or pre-mounting of fixtures as part of its standard scope of work. Any such services must be agreed upon in writing prior to shipment.
Traxoncue is not responsible for content (e.g. videos or lighting cues) unless it is specifically agreed upon and listed separately from standard system commissioning services in the project quotation.
Traxoncue is happy to support your team in every way we can, and we look forward to a beautiful and successful installation.

© 2010 Traxon Technologies

REV.	DATE	BY	REMARKS
	190903 ProPoint Linear Standard Drawing - ERC.dwg		

LOCATION: ####
FILE NAME: 190903 ProPoint Linear Standard Drawing - ERC.dwg
REMARKS: ####

PROJECT: ####
DATE: ####
JOB NO: ####
SHEET SIZE: ####
SCALE: ####
DRAWN BY: ####
CHECKED BY: ####
SHEET NUMBER: TX201
SHEET TITLE: ProPoint Linear - 4ft Luminaire